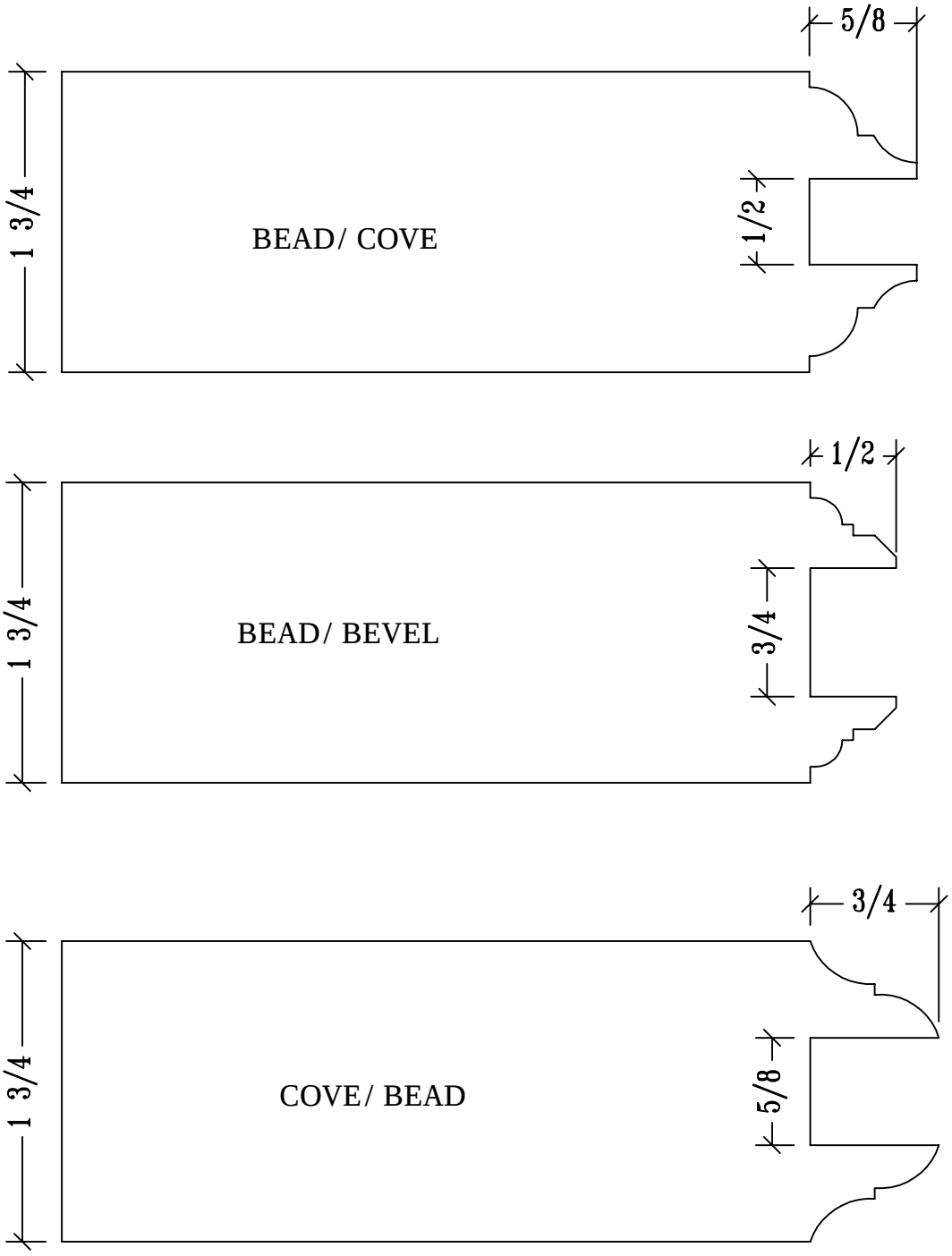

PDF created with pdfFactory trial version www.pdffactory.com

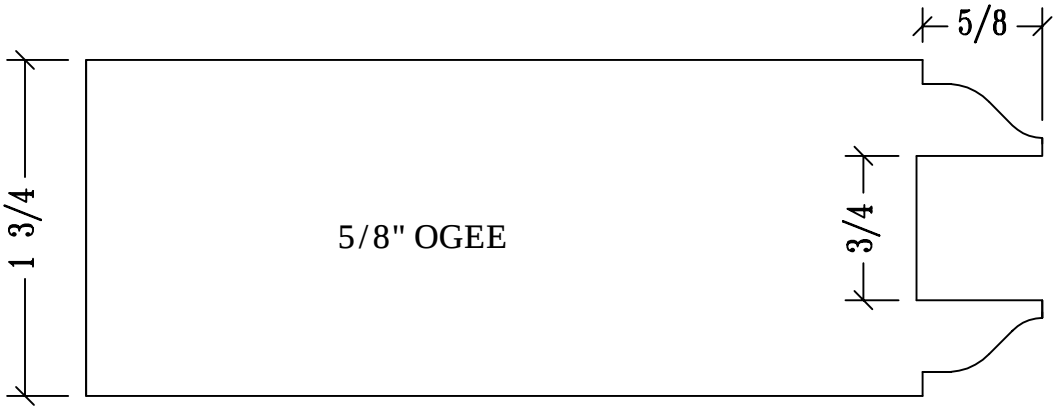

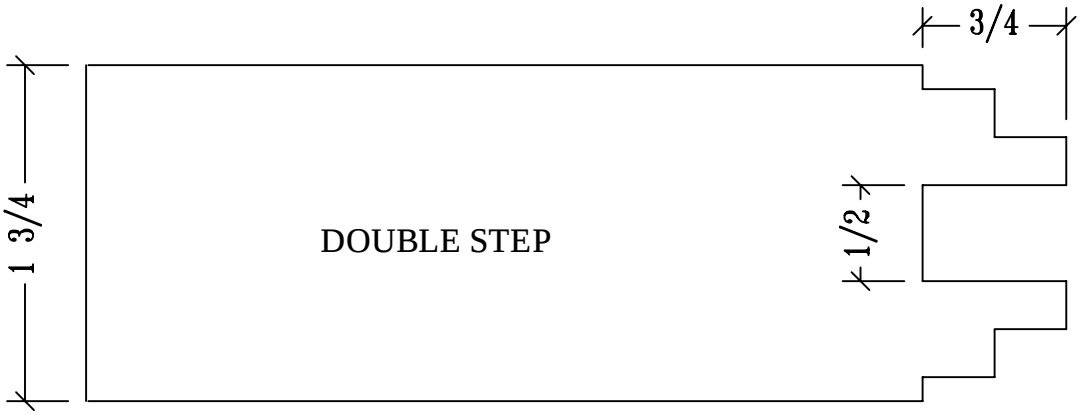

PDF created with pdfFactory trial version www.pdffactory.com

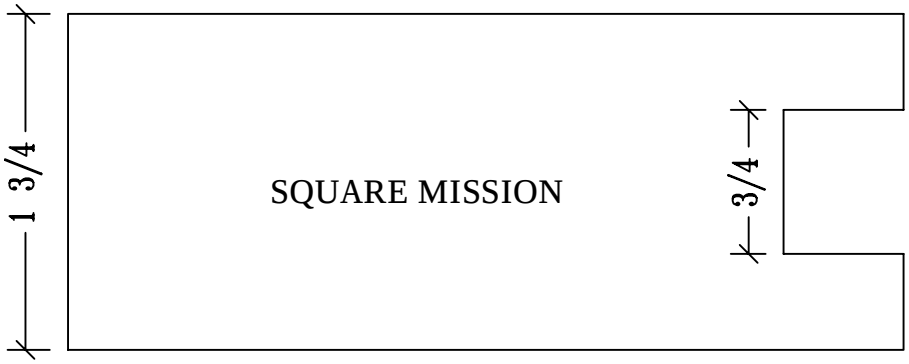

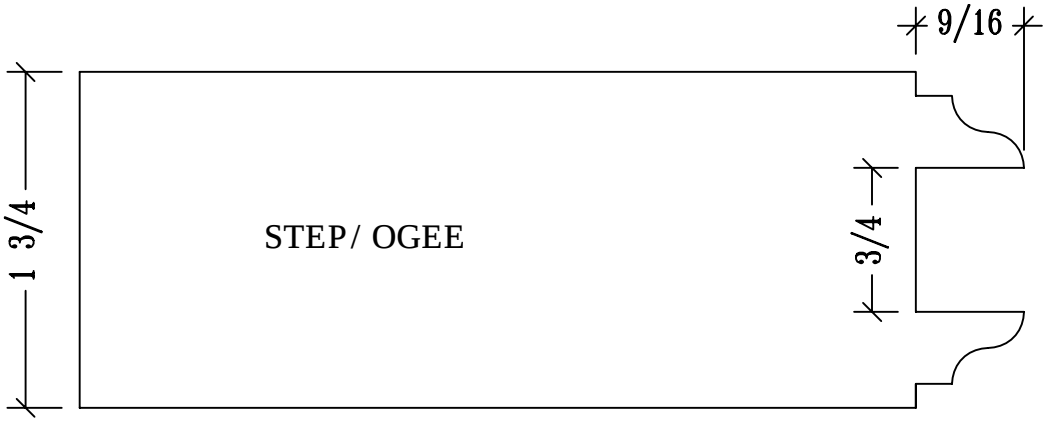

PDF created with pdfFactory trial version www.pdffactory.com

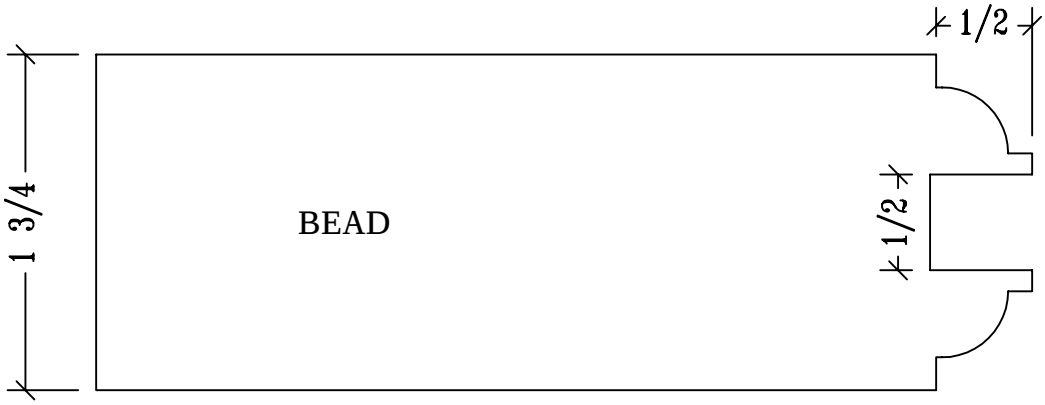

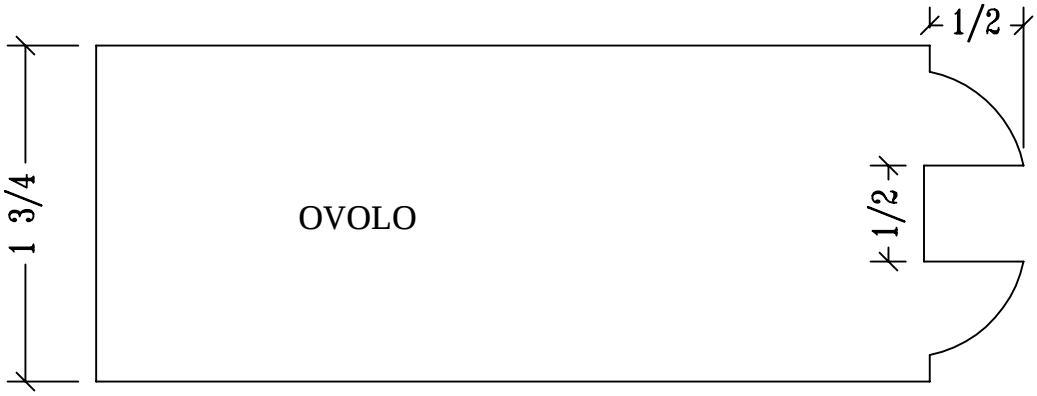

PDF created with pdfFactory trial version www.pdffactory.com

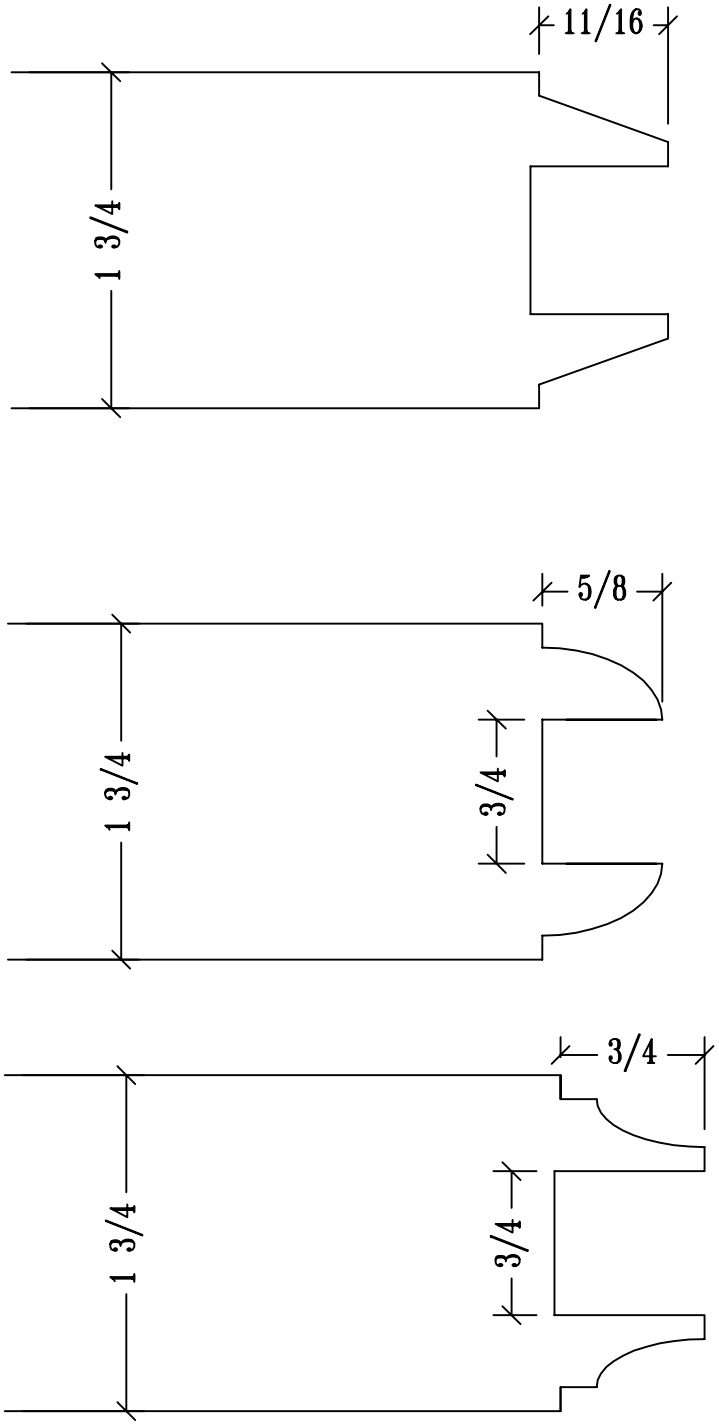

PDF created with pdfFactory trial version www.pdffactory.com

PDF created with pdfFactory trial version www.pdffactory.com

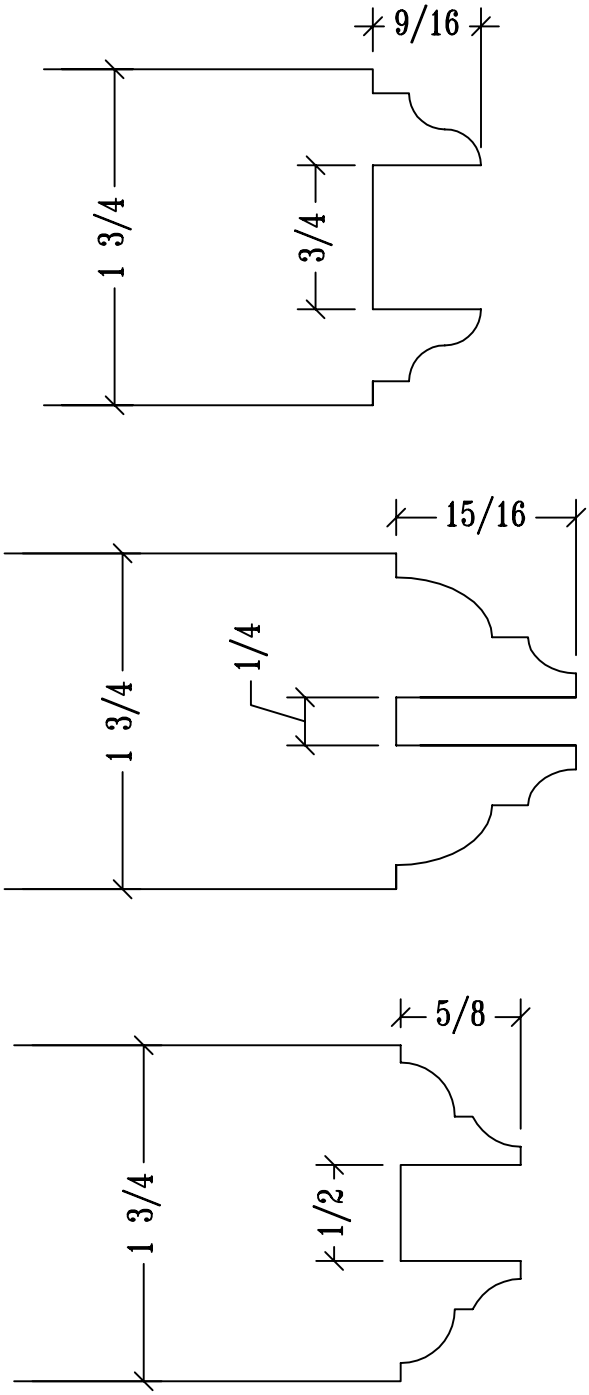

PDF created with pdfFactory trial version www.pdffactory.com

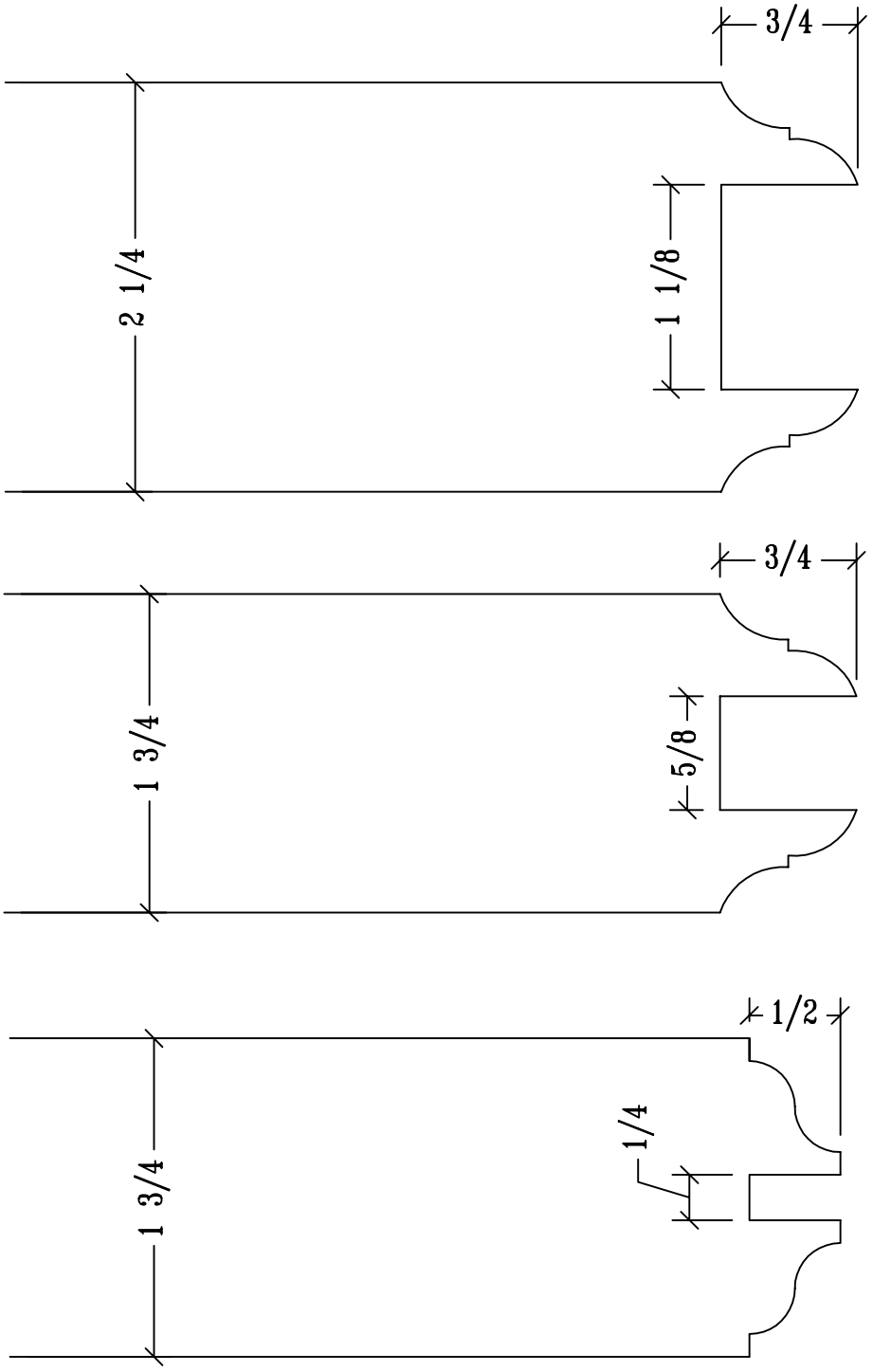

PDF created with pdfFactory trial version www.pdffactory.com

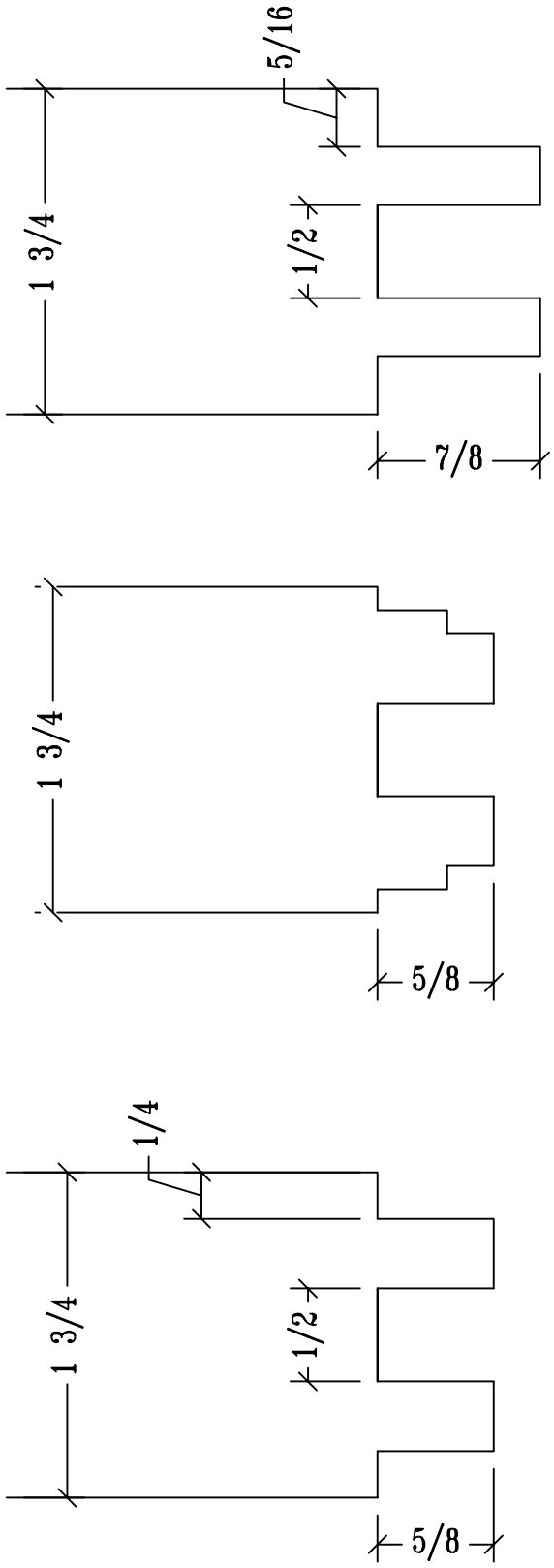

PDF created with pdfFactory trial version www.pdffactory.com

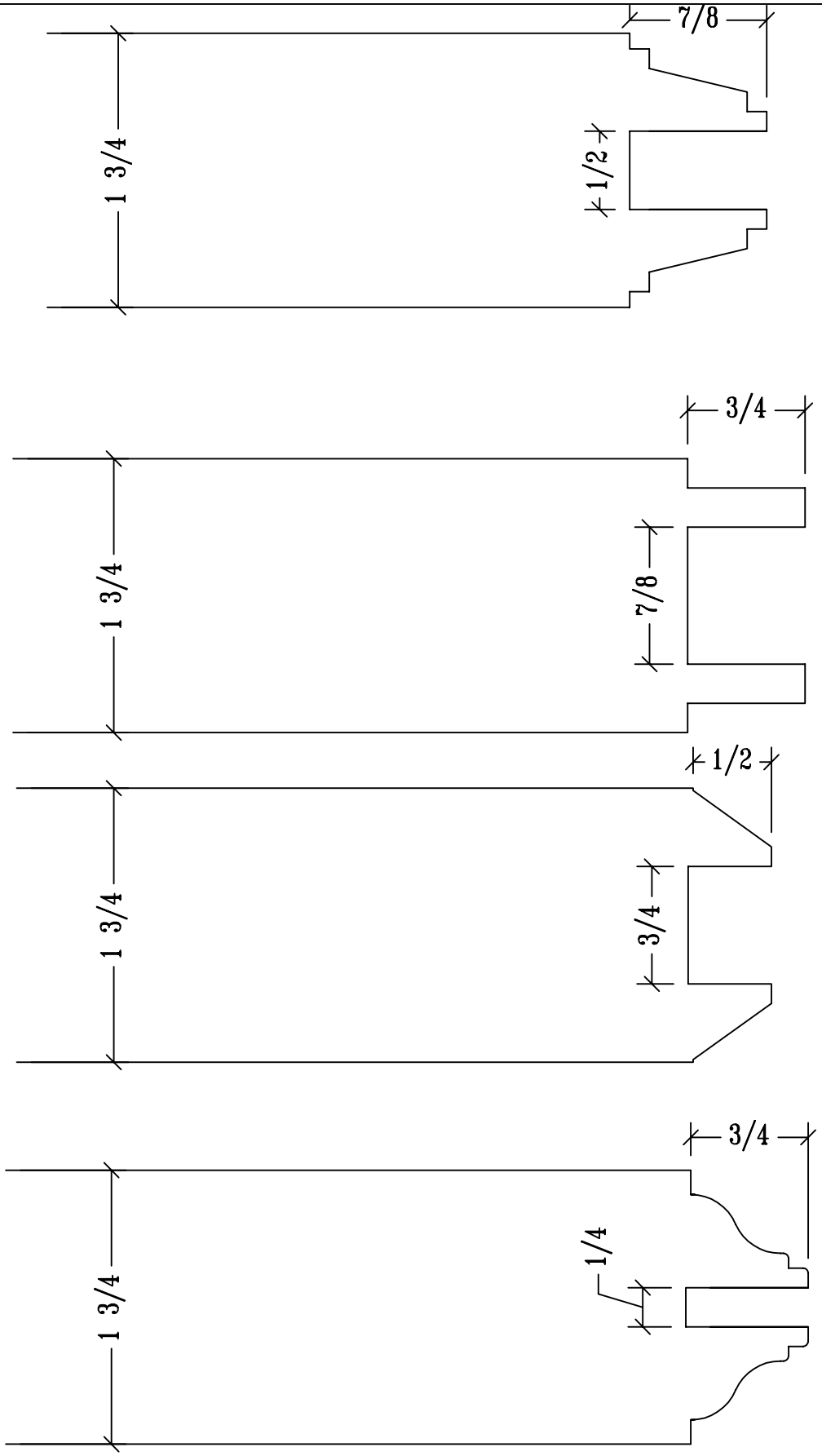

PDF created with pdfFactory trial version www.pdffactory.com

PDF created with pdfFactory trial version www.pdffactory.com

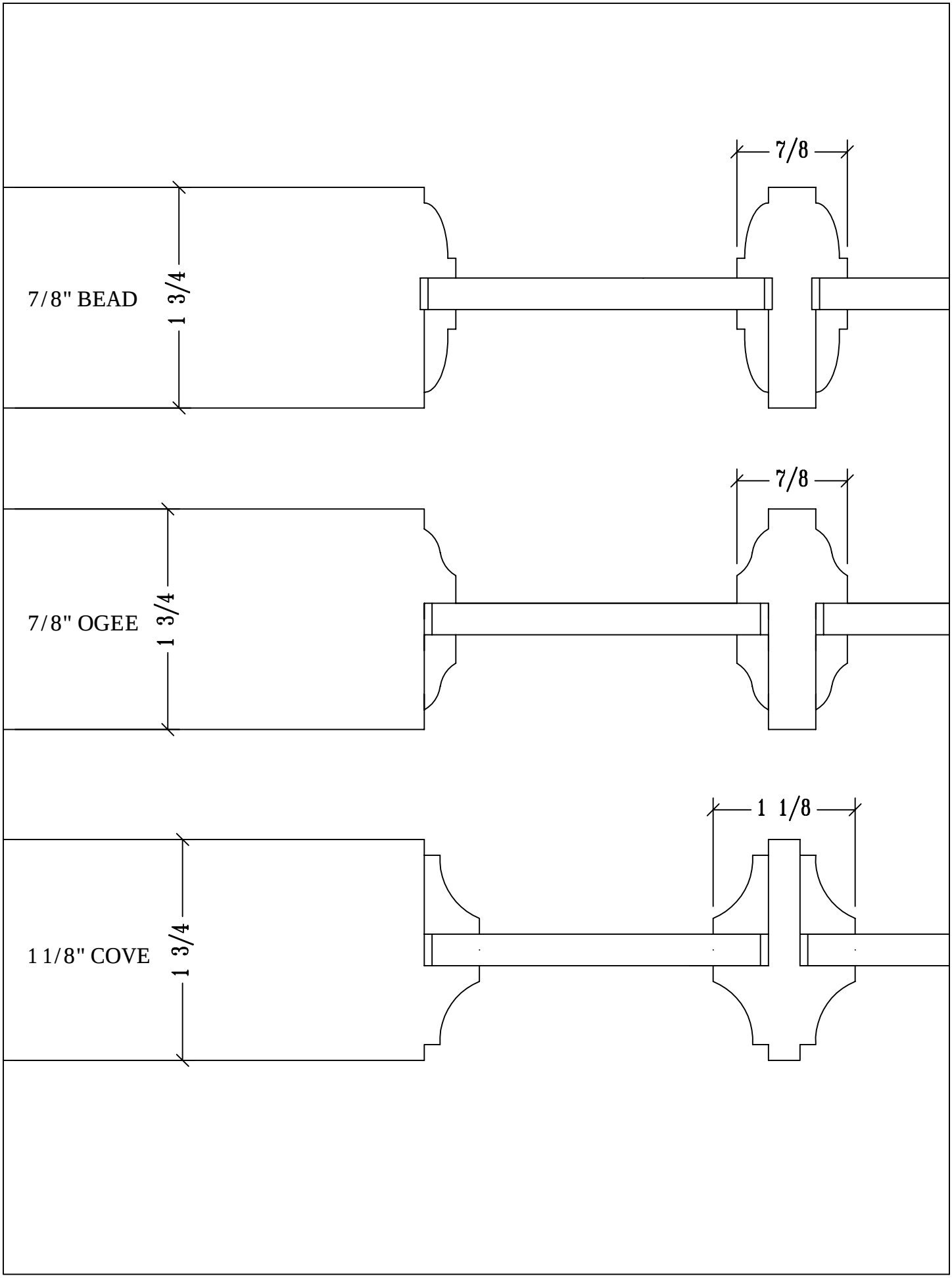

PDF created with pdfFactory trial version www.pdffactory.com

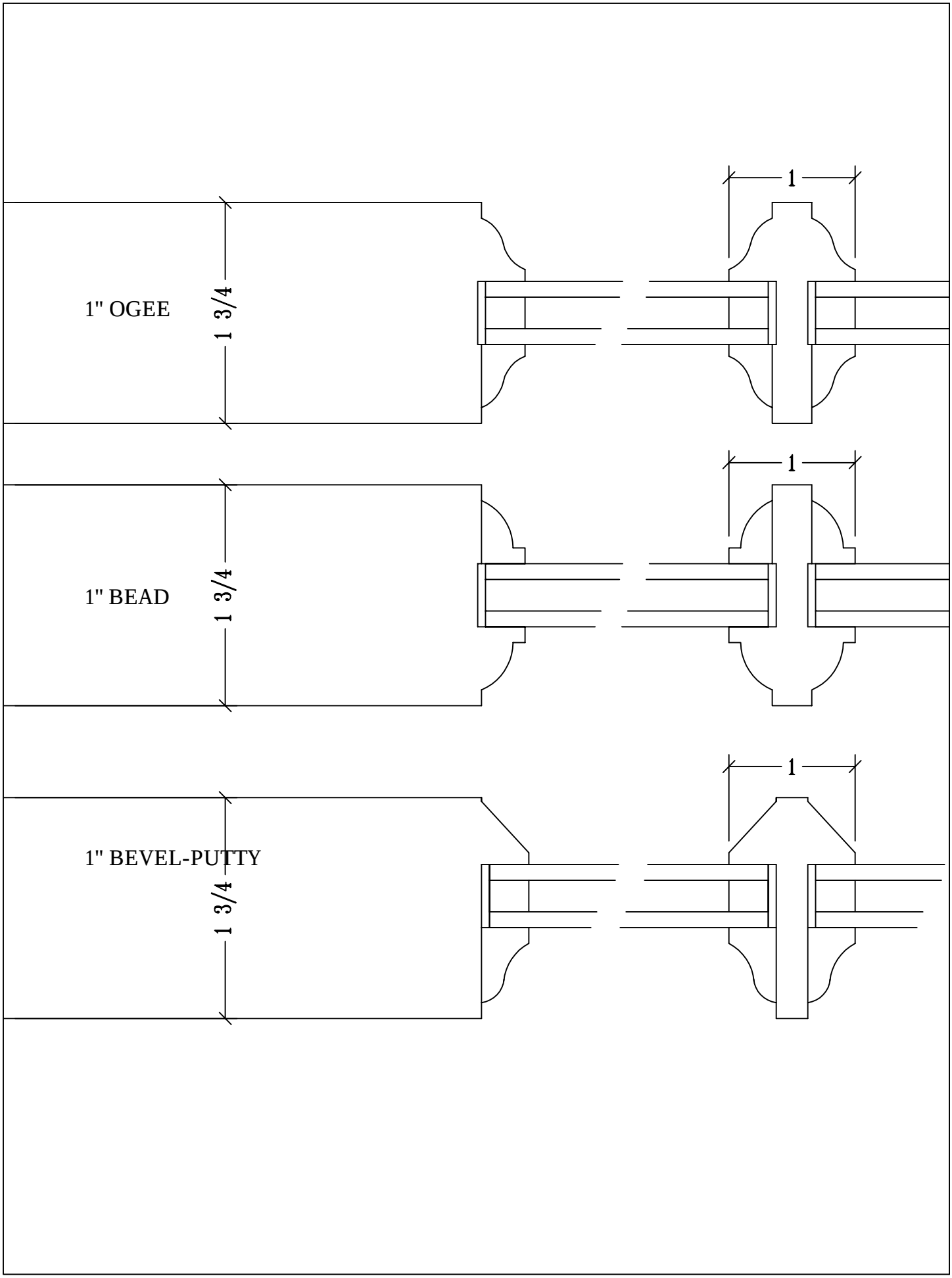

PDF created with pdfFactory trial version www.pdffactory.com

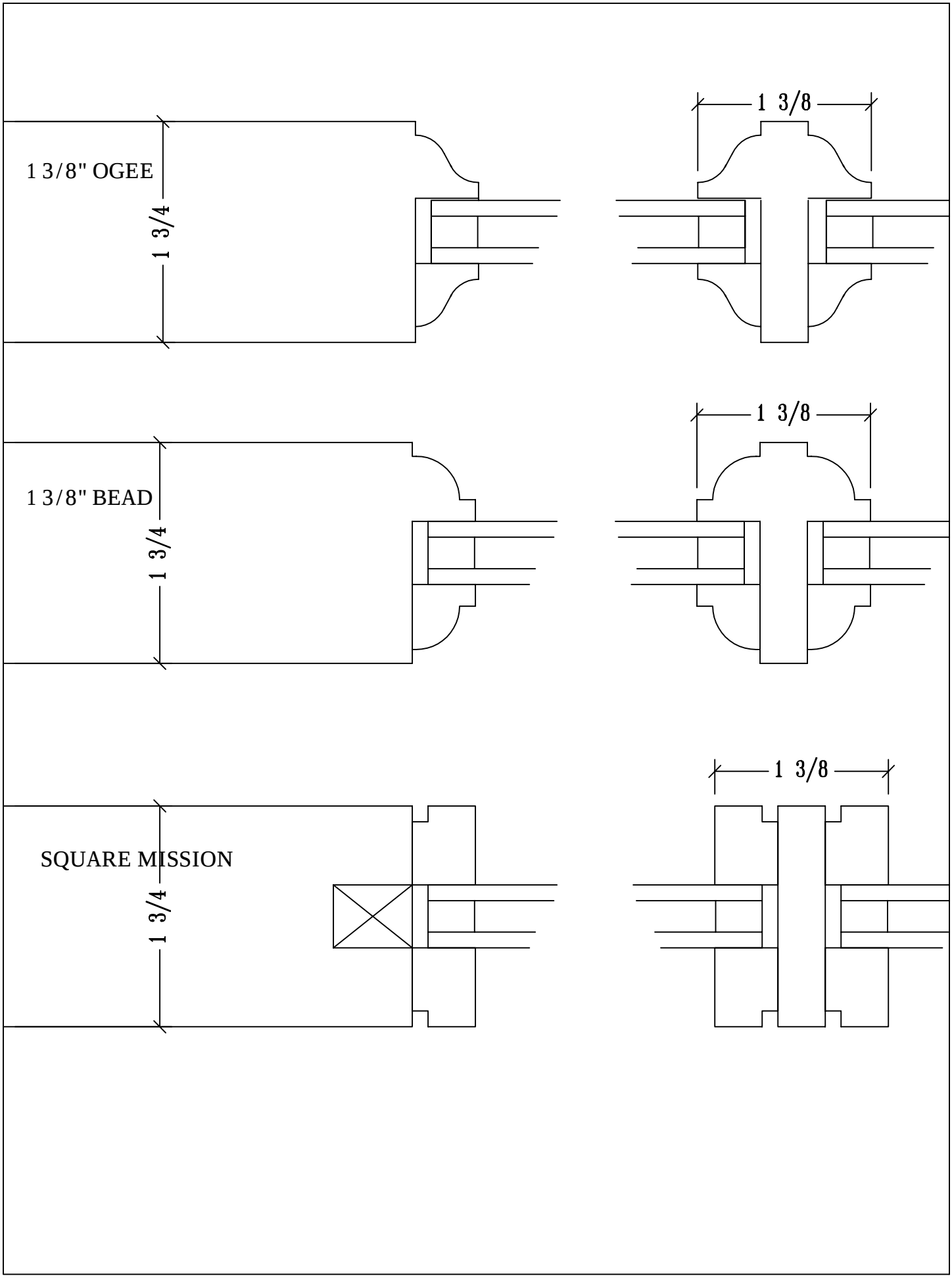

PDF created with pdfFactory trial version www.pdffactory.com

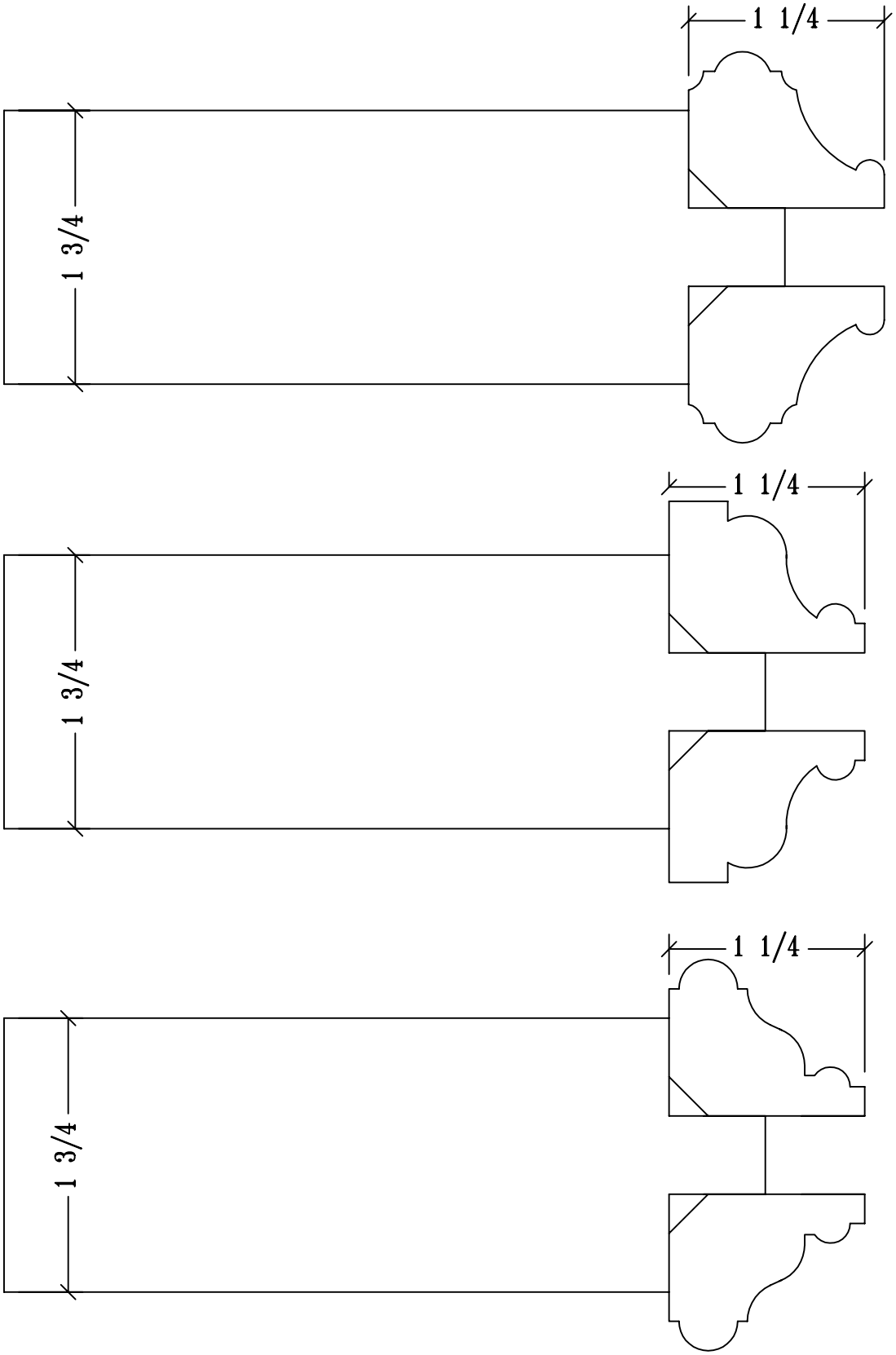

PDF created with pdfFactory trial version www.pdffactory.com

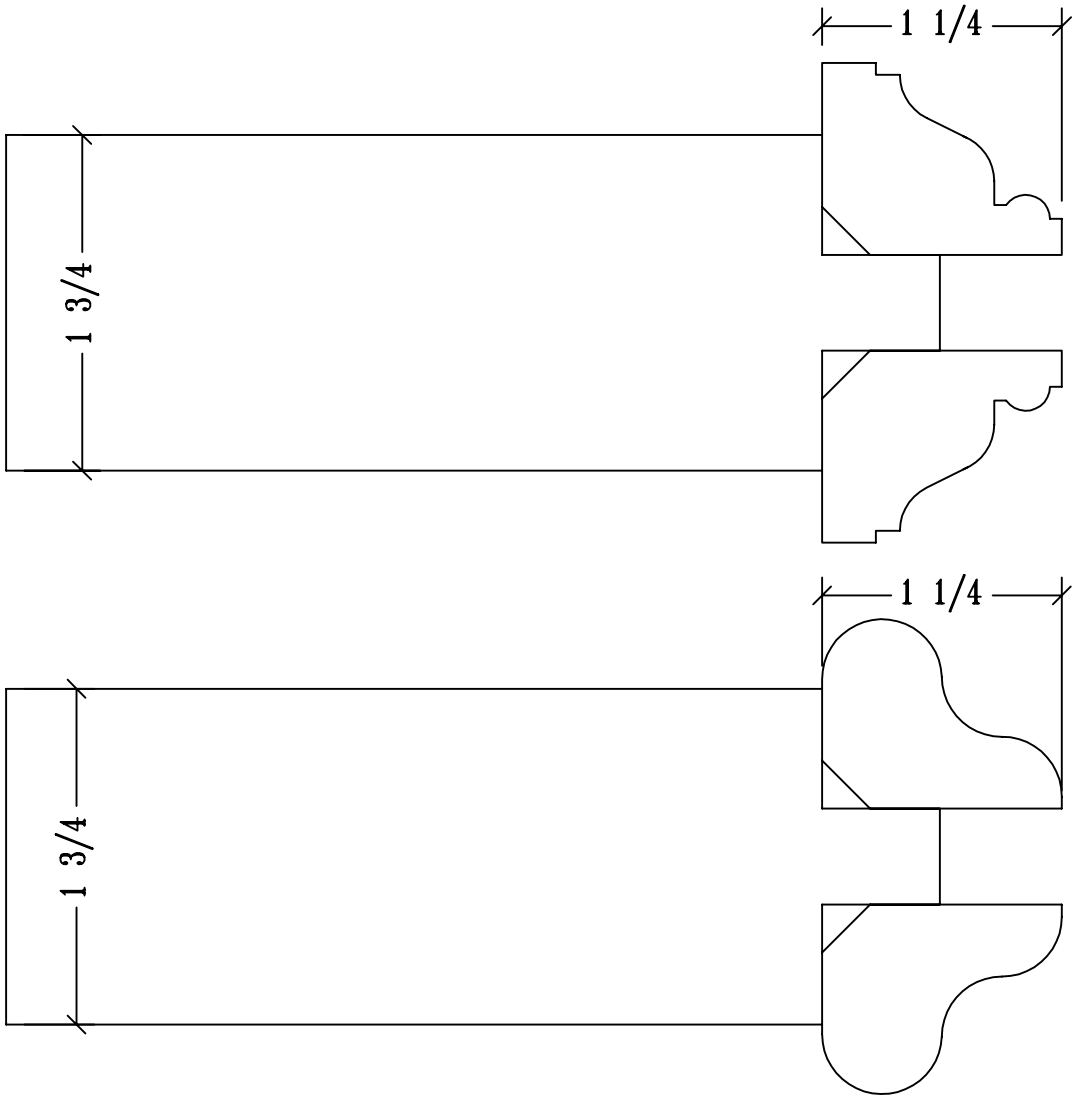

PDF created with pdfFactory trial version www.pdffactory.com

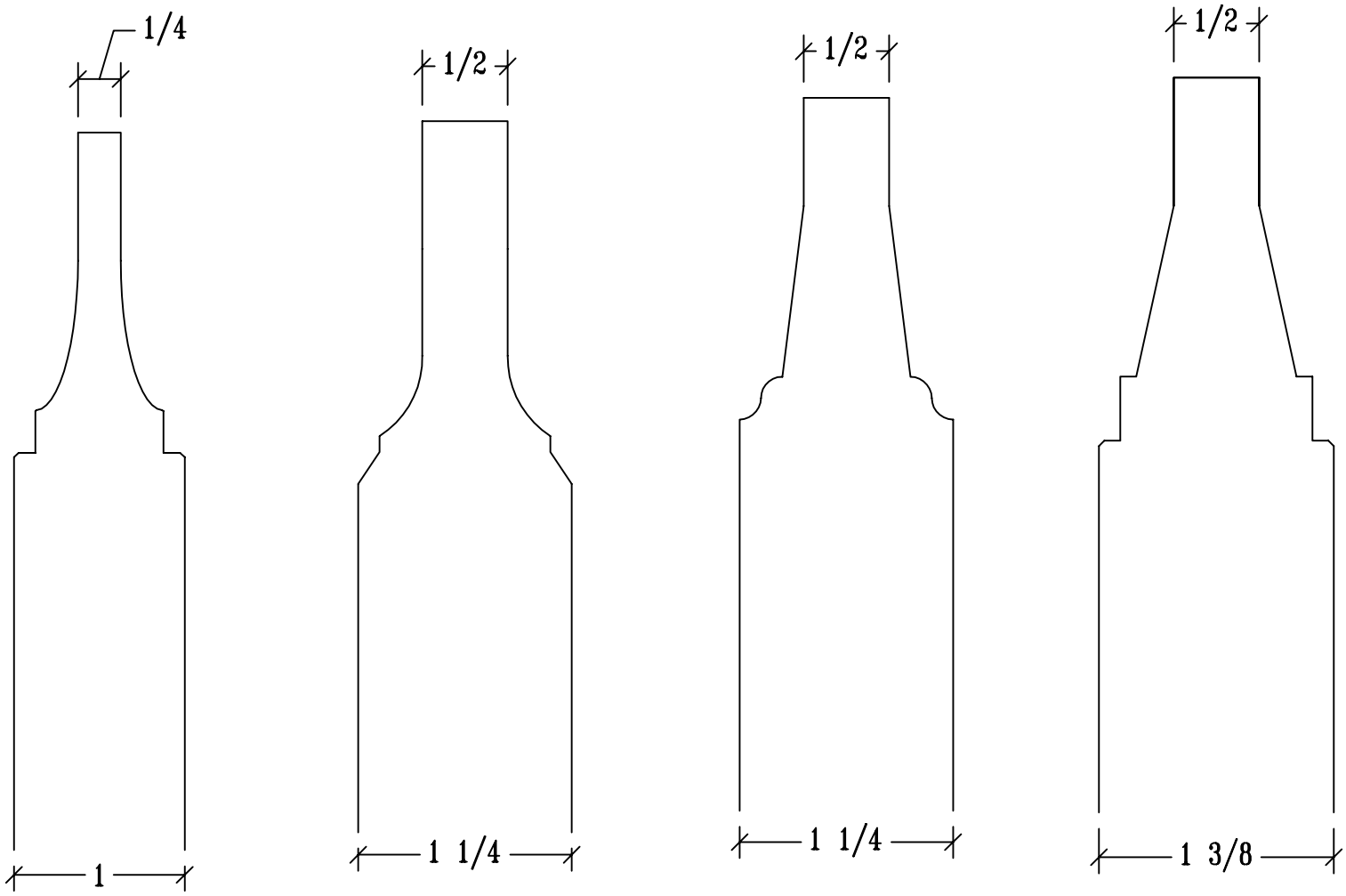

PDF created with pdfFactory trial version www.pdffactory.com

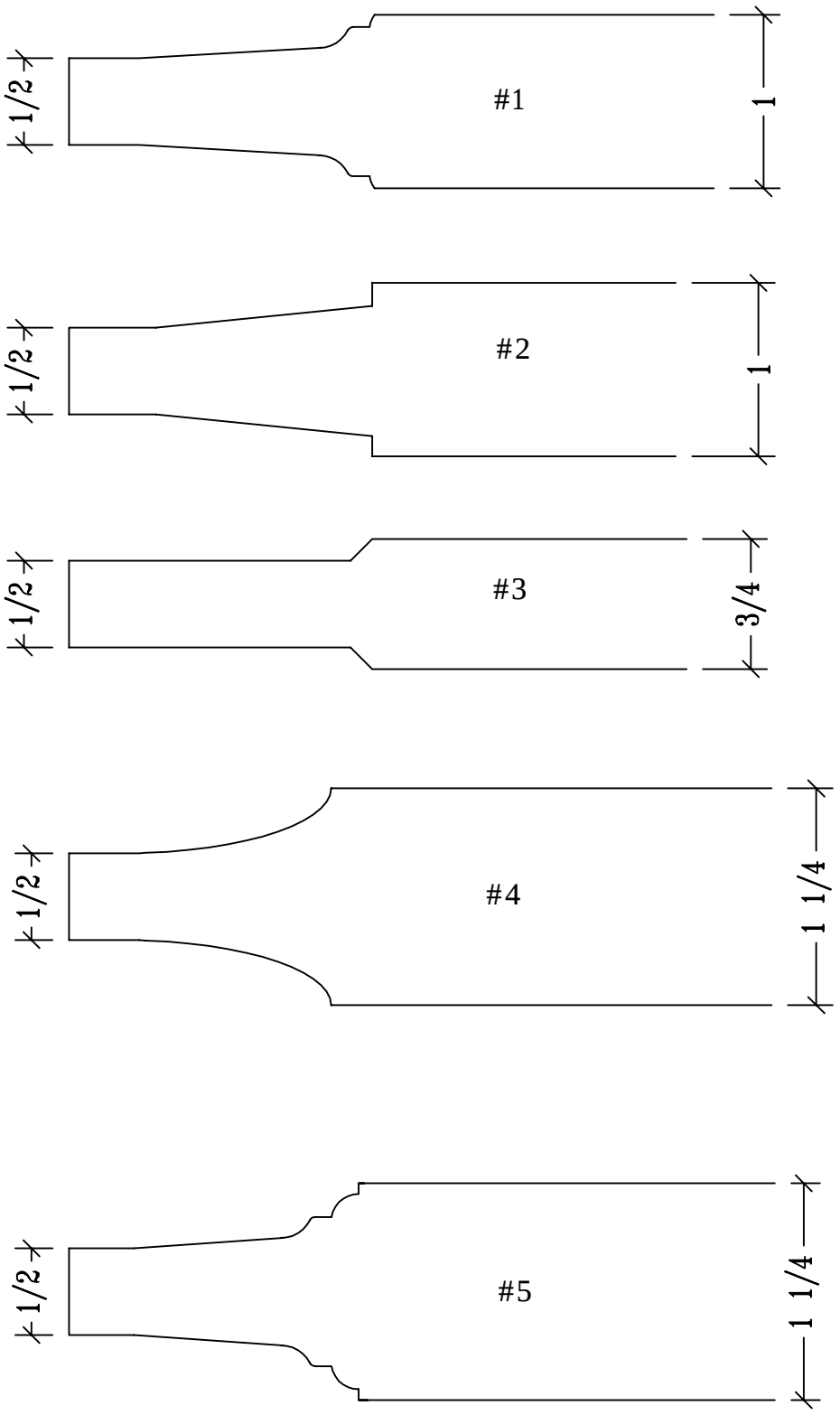

PDF created with pdfFactory trial version www.pdffactory.com

PDF created with pdfFactory trial version www.pdffactory.com

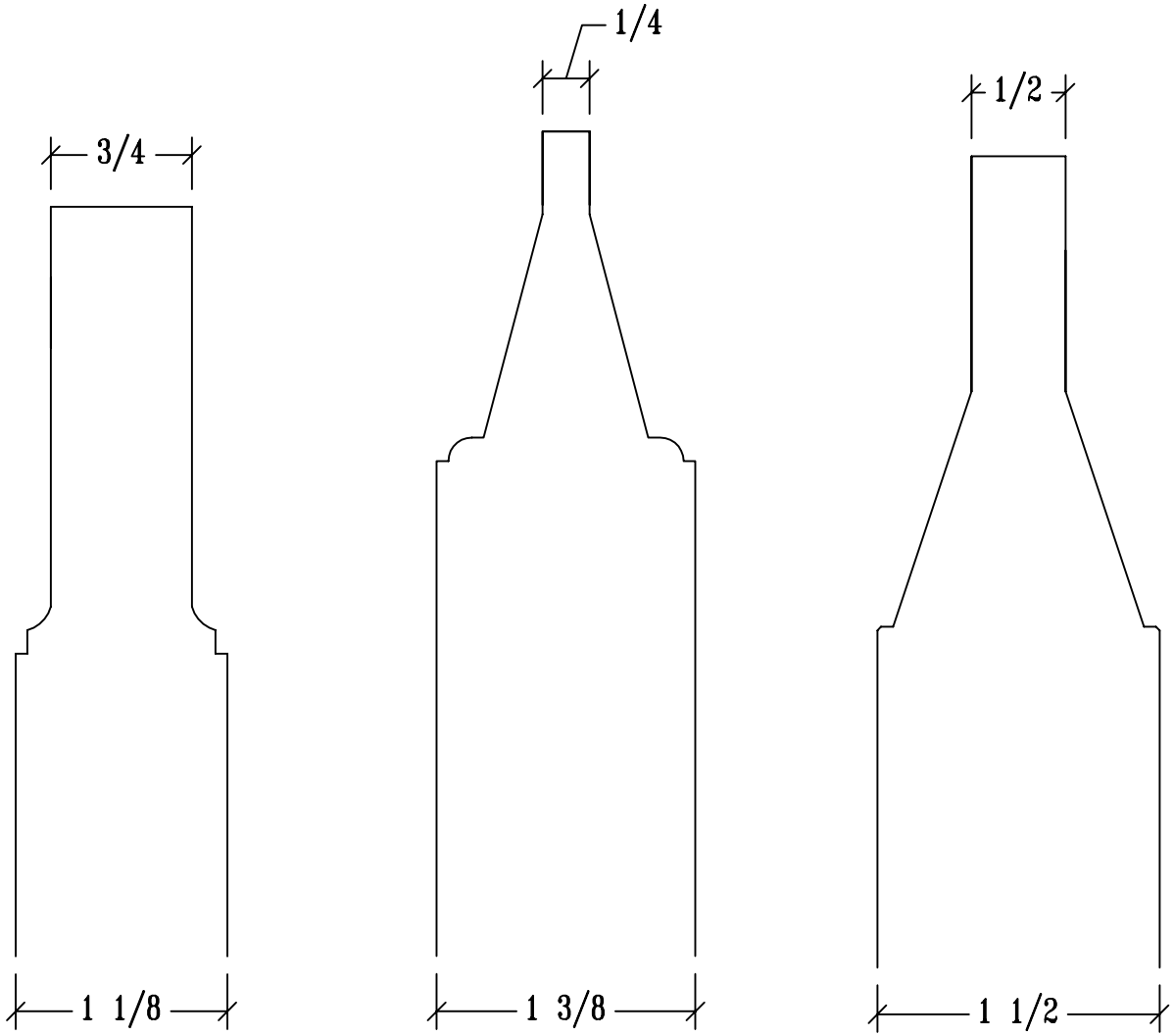

PDF created with pdfFactory trial version www.pdffactory.com

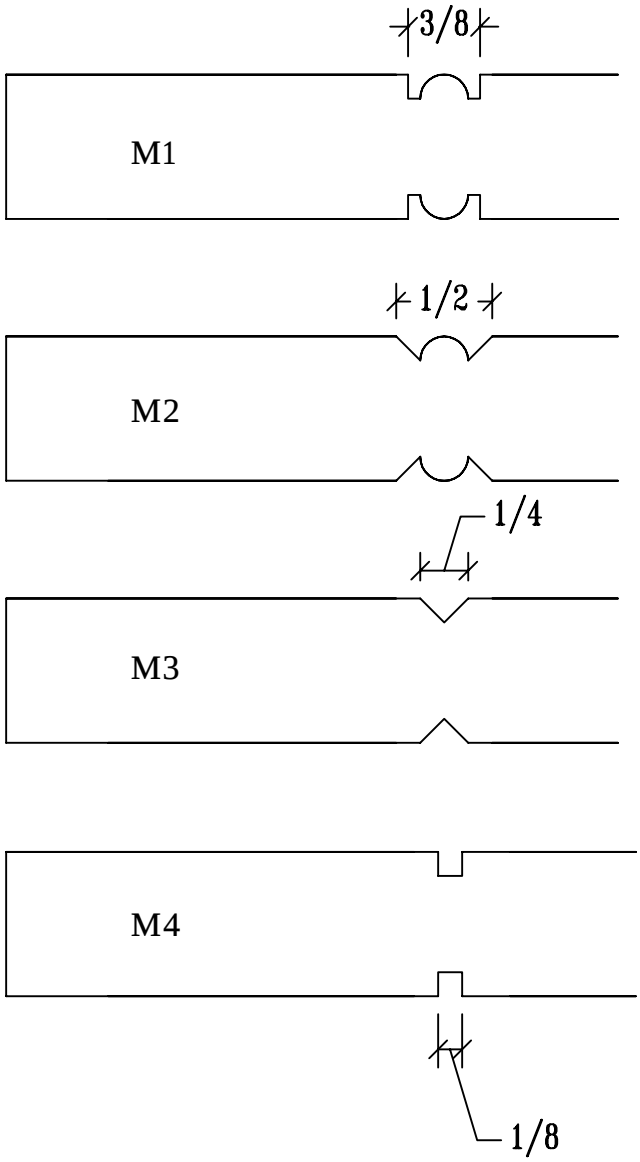

PDF created with pdfFactory trial version www.pdffactory.com